DRG. No. 010L

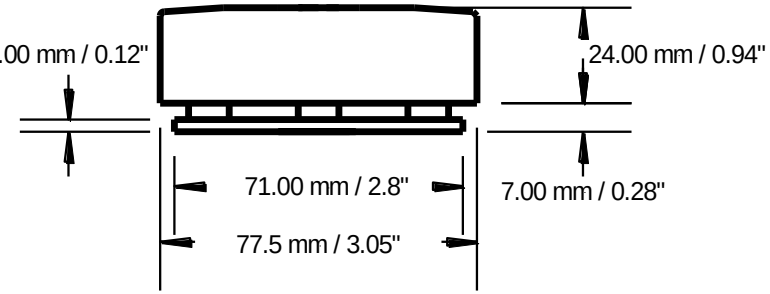

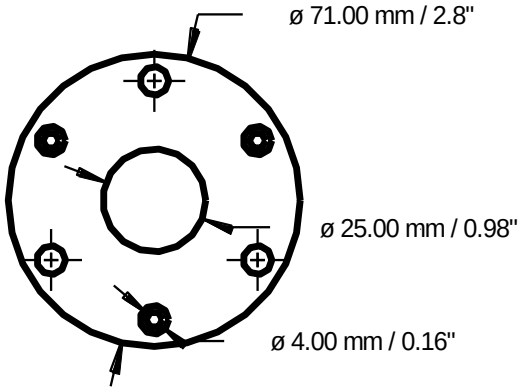

Under Table Installation

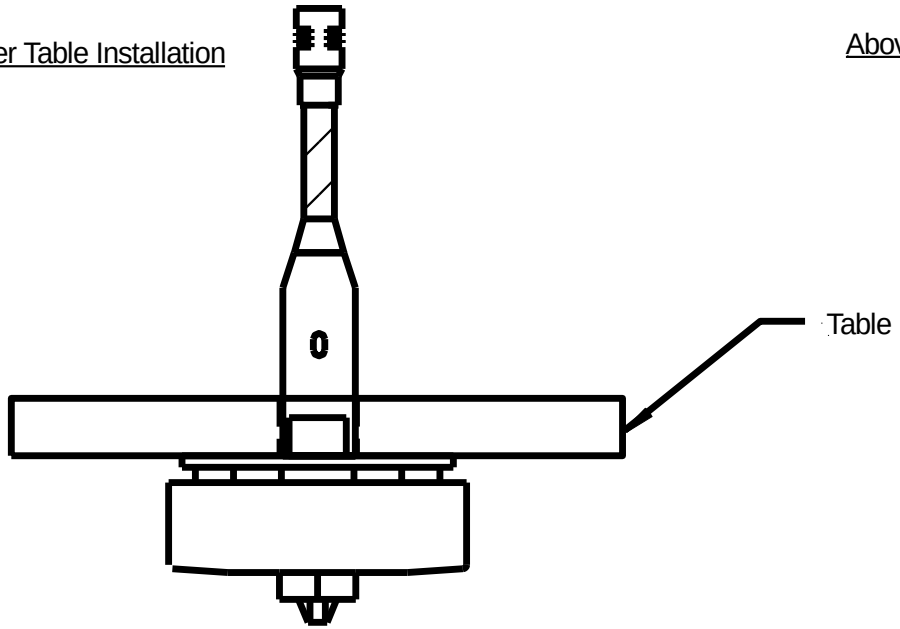

Above Table Installation

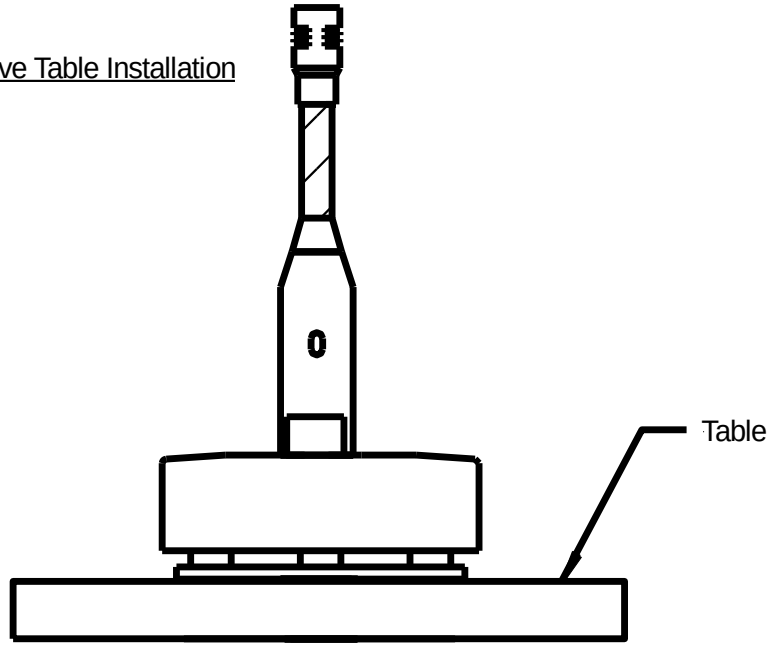

Recommended table cut out 21mm (0.83")

ISSUE	DESCRIPTION	APP'D	DATE		TITLE	DRAWN	TRACED	CHECKED	APPROVED	DATE
				CLOCKAUDIO		C B				14/07/05
						DRAWING No. 010L				